S I M E S

S.4653 - INSTALLAZIONE
S.4653 - INSTALLATION

1

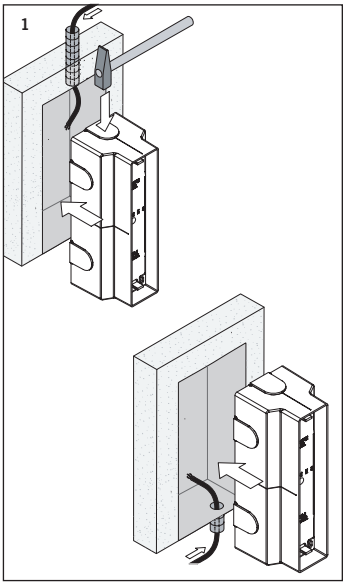

2

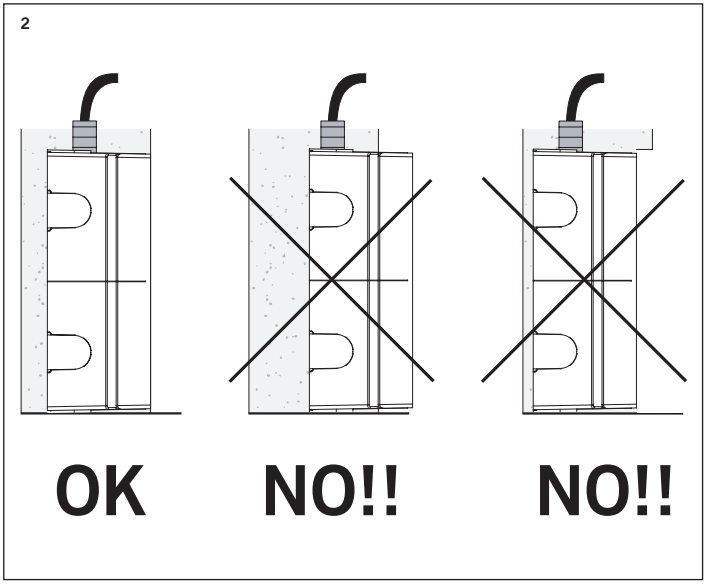

3

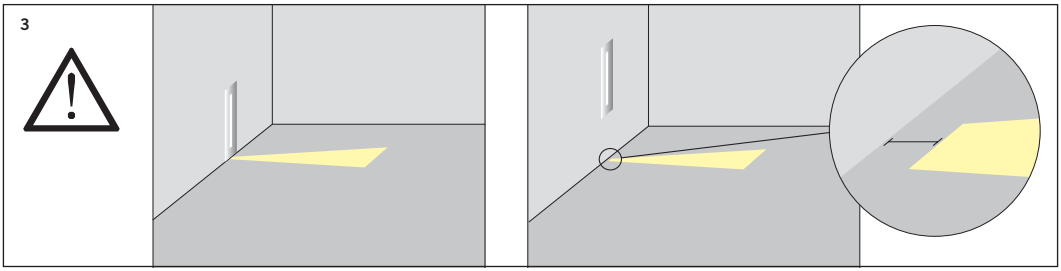

4

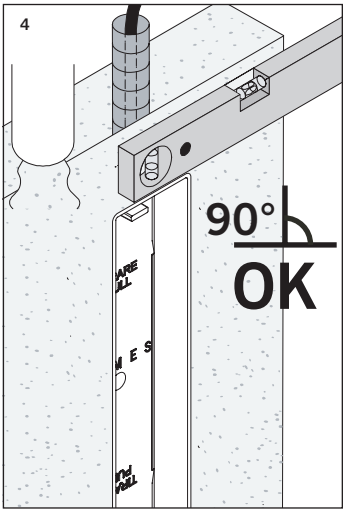

5

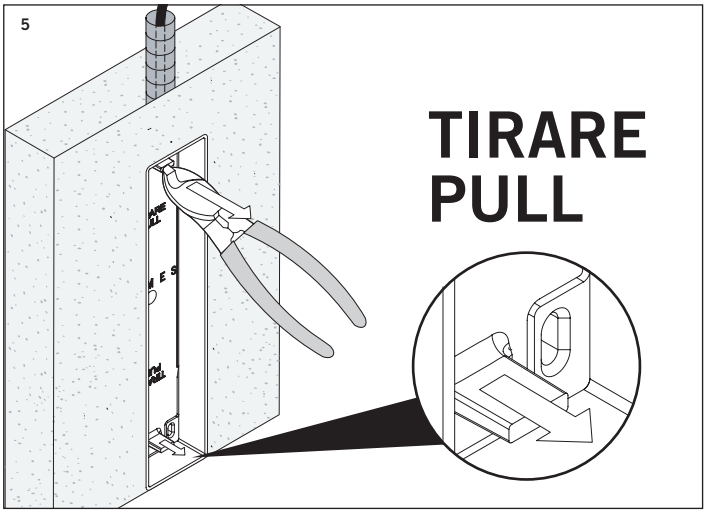

SIMES S.p.A. VIA G. PASTORE 2/4 - 25040 CORTE FRANCA (BRESCIA) - ITALY
TEL. +39 0309860430-FAX +39 0309860439- E-mail: simes@simes.it - http://www.simes.it

We reserve the right to change specifications without prior written notice